YASKAWA

MOTOMAN-GP8,-GP7
SUPPLEMENTAL INSTRUCTIONS

TYPE:
YR-1-06VX8-F00 (FOR FOOD GRADE GREASE)
YR-1-06VX7-F00 (FOR FOOD GRADE GREASE)

Upon receipt of the product and prior to initial operation, read these instructions thoroughly, and retain for future reference.

MOTOMAN INSTRUCTIONS

MOTOMAN-GP8/AR700,-GP7/AR900 INSTRUCTIONS
MOTOMAN-GP8,-GP7 SUPPLEMENTAL INSTRUCTIONS
YRC1000 INSTRUCTIONS
YRC1000 OPERATOR'S MANUAL (GENERAL) (SUBJECT SPECIFIC)
YRC1000 MAINTENANCE MANUAL
YRC1000 ALARM CODES (MAJOR ALARMS) (MINOR ALARMS)

YRC1000micro INSTRUCTIONS
YRC1000micro OPERATOR'S MANUAL
YRC1000micro MAINTENANCE MANUAL
YRC1000micro ALARM CODES (MAJOR ALARMS) (MINOR ALARMS)

Have the following information available when contacting the YASKAWA Representative:
- System
- Primary Application
- Software Version *(Located on Programming Pendant by selecting: {Main Menu} - {System Info} - {Version})*
- Warranty ID *(Located on Robot Controller)*
- Robot Serial Number *(Located on Manipulator data plate)*
- Robot Sales Order Number *(Located on Robot controller data plate)*

The Americas YASKAWA Representative

- 24-hour Telephone Number: **(937) 847-3200**
  Use for urgent or emergency needs for technical support, service and/or replacement parts
- Routine Technical Inquiries: *techsupport@motoman.com*
  Allow up to 36 hours for response

Part Number: 180382-1CD
Revision: 2

MANUAL NO.
HW1484385 ② 1/21

Introduction

This supplemental instruction manual describes how YR-1-06VX8-F00/ YR-1-06VX7-F00 are different from YR-1-06VX8-A00/YR-1-06VX7-A00.

Point of Difference

The YR-1-06VX8-F00/YR-1-06VX7-F00 are different from the YR-1-06VX8-A00/YR-1-06VX7-A00 in the following point:

- Food grade grease specification
- Application (GP: Handling application only)

  - 3.4 Location
  - 5.1 Basic Specifications
  - 9.1 Inspection Schedule
  - 9.3 Grease Replenishment Procedures
  - 10 Recommended Spare Parts

The differences are described based on “MOTOMAN-GP8/AR700, -GP7/ AR900 INSTRUCTIONS” (Manual No. HW1483944). Read this manual thoroughly replacing the subject matters for changes with this supplementary instruction manual.

NOTE

- For this specification, grease only differs from the standard specification.
- Before using the specific applications, the user must perform sufficient risk assessment with the system integrator.

3.4 Location

When installing the manipulator, it is necessary to satisfy the following environmental conditions:

Table 3-3: Ambient Conditions

Type / Item	YR-1-06VX8-F00 YR-1-06VX7-F00
Ambient temperature during operation	+15°C - +45°C
Humidity	20%RH - 80%RH (no-condensing)
Vibration	4.9 m/s^2 (0.5G) or less
Altitude	1000 m or less
Flatness for installation	0.5 mm or less
Others	Free from explosive and corrosive gas or liquid
	Free from excessive electrical noise (plasma)
	Free from strong magnetic field

NOTE

When the operation is started after the manipulator has been out of operation and left in the temperature as low as 15°C for a long period, the alarm may occur due to the resistance of the drive.
Before starting the operation, be sure to perform the break-in operation for approx. two minutes for R, B, T-axis in turns at 80 percent speed.

5.1 Basic Specifications

Table 5-1: Basic Specifications (GP8)[1)]

Item / Model		MOTOMAN-GP8
Application		Handling
Structure		Vertically Articulated
Degree of freedom		6
Payload	Wrist part	8 kg
	U-arm[2)]	1 kg
Repeatability[3)]		0.01 mm
Range of Motion	S-Axis (turning)	-170° - +170°
	L-Axis (lower arm)	-65° - +145°
	U-Axis (upper arm)	-70° - +190°
	R-Axis (wrist roll)	-190° - +190°
	B-Axis (wrist pitch/yaw)	-135° - +135°
	T-Axis (wrist twist)	-360° - +360°
Maximum Speed	S-Axis	7.94 rad/s, 455° /s
	L-Axis	6.72 rad/s, 385° /s
	U-Axis	9.07 rad/s, 520° /s
	R-Axis	9.59 rad/s, 550° /s
	B-Axis	9.59 rad/s, 550° /s
	T-Axis	17.45 rad/s, 1000° /s
Allowable Moment[4)]	R-Axis	17 N•m (1.73 kgf•m)
	B-Axis	17 N•m (1.73 kgf•m)
	T-Axis	10 N•m (1.02 kgf•m)
Allowable Inertia[4)] ($GD^2/4$)	R-Axis	0.5 kg•m^2
	B-Axis	0.5 kg•m^2
	T-Axis	0.2 kg•m^2
Approx. Mass		35 kg
Protective enclosure		IP67
Mounting method[5)]		Floor-, wall-, tilt-, ceiling-mounted,
Power Capacity		1 kVA
Applicable controller[6)]	YRC1000	ERAR-1000-06VX8-☐ *☐: Depends on the specification.
	YRC1000micro	ERBR-100-06VX8-☐ *☐: Depends on the specification.
Noise[7)]		75 dB or less

1 SI units are used in this table. However, gravitational unit is used in ( )
2 The load applied on the U-arm will vary depending on the load mass of the wrist part. For details, refer to *chapter 7.1.1 "Allowable Load"* .
3 Conformed to ISO9283
4 Refer to *fig. 6-1 "Moment Arm Rating"* for details on the allowable moment and the allowable inertia.
5 For the tilt-, and the wall-mounted ways, S-axis has the limited operating range.
6 The last digit of the type number differs depending on the specification. Refer to "YRC1000 INSTRUCTIONS (RE-CTO-A221)", "YRC1000micro INSTRUCTIONS (RE-CTO-A222)", YRC1000 supplementary instructions, and YRC1000micro supplementary instructions.
7 Conformed to equivalent continuous A-weighted sound pressure level measured in accordance with ISO11201(EN31201)
1, Measurement is carried out when the maximum load is mounted to the manipulator and operated in the maximum speed.
2, Measurement is carried out:
-between 1.2 m and 1.5 m above the ground.
-400 mm away from the P-point maximum envelope.

5.1 Basic Specifications

Table 5-2: Basic Specifications (GP7)[1)]

Item / Model		MOTOMAN-GP7
Application		Handling
Structure		Vertically Articulated
Degree of freedom		6
Payload	Wrist part	7 kg
	U-arm[2)]	1 kg
Repeatability[3)]		0.01 mm
Range of Motion	S-Axis (turning)	-170° - +170°
	L-Axis (lower arm)	-65° - +145°
	U-Axis (upper arm)	-70° - +190°
	R-Axis (wrist roll)	-190° - +190°
	B-Axis (wrist pitch/yaw)	-135° - +135°
	T-Axis (wrist twist)	-360° - +360°
Maximum Speed	S-Axis	6.54 rad/s, 375° /s
	L-Axis	5.50 rad/s, 315° /s
	U-Axis	7.15 rad/s, 410° /s
	R-Axis	9.59 rad/s, 550° /s
	B-Axis	9.59 rad/s, 550° /s
	T-Axis	17.45 rad/s, 1000° /s
Allowable Moment[4)]	R-Axis	17 N•m (1.73 kgf•m)
	B-Axis	17 N•m (1.73 kgf•m)
	T-Axis	10 N•m (1.02 kgf•m)
Allowable Inertia[4)] ($GD^2/4$)	R-Axis	0.5 kg•m^2
	B-Axis	0.5 kg•m^2
	T-Axis	0.2 kg•m^2
Approx. Mass		37 kg
Protective enclosure		IP67
Mounting method[5)]		Floor-, wall-, tilt-, ceiling-mounted,
Power Capacity		1 kVA
Applicable controller[6)]	YRC1000	ERAR-1000-06VX8-☐ *☐: Depends on the specification.
	YRC1000micro	ERBR-100-06VX8-☐ *☐: Depends on the specification.
Noise[7)]		75 dB or less

1 SI units are used in this table. However, gravitational unit is used in ( )
2 The load applied on the U-arm will vary depending on the load mass of the wrist part. For details, refer to *chapter 7.1.1 "Allowable Load"* .
3 Conformed to ISO9283
4 Refer to *fig. 6-1 "Moment Arm Rating"* for details on the allowable moment and the allowable inertia.
5 For the tilt-, and the wall-mounted ways, S-axis has the limited operating range.
6 The last digit of the type number differs depending on the specification. Refer to "YRC1000 INSTRUCTIONS (RE-CTO-A221)", "YRC1000micro INSTRUCTIONS (RE-CTO-A222)", YRC1000 supplementary instructions, and YRC1000micro supplementary instructions.
7 Conformed to equivalent continuous A-weighted sound pressure level measured in accordance with ISO11201(EN31201)
1, Measurement is carried out when the maximum load is mounted to the manipulator and operated in the maximum speed.
2, Measurement is carried out:
-between 1.2 m and 1.5 m above the ground.
-400 mm away from the P-point maximum envelope.

9.1 Inspection Schedule

Table 9-1: GP8, GP7 Inspection Items (Sheet 1 of 2)

Items[1)]		Schedule				Method	Operation	Inspection Charge		
		Daily	1000HCycle	9000HCycle	18000H			Specified Personnel	Licensee	Your YASKAWA representative
1	Alignment mark	●				Visual	Check alignment mark accordance at the home position. Check for damage.	●	●	●
2	Working area and manipulator	●				Visual	Clean the work area if dust or spatter is present. Clean the seeped oil or etc.[2)] Check for damage and outside cracks.	●	●	●
3	Baseplate mounting bolts		●			Spanner Wrench	Tighten loose bolts. Replace if necessary.	●	●	●
4	Cover mounting screws		●			Screwdriver, Wrench	Tighten loose bolts. Replace if necessary.	●	●	●
5	Connector base		●			Manual	Check for loose connectors.	●	●	●
6	Connector of manipulator cable		●			Manual	Check for loose connectors.	●	●	●
7	L, U, R, B, T-axis timing belt			●		Manual Visual	Check the tension and the condition. (Replace if failure of tooth, swelling, or abnormal abrasion occurs.)		●	●
8	Wire harness in manipulator			●		Visual Multimeter	Check for conduction between the main connecter of base and intermediate connector with manually shaking the wire. Check for wear of protective spring		●	●
					●		Replace[3)]			●
9	Battery pack in manipulator				●		Replace the battery pack when the battery alarm occurs or the manipulator drove for 18000H.		●	●
10	S-axis speed reducer S-axis gear			●		Injection Syringe	Check for malfunction. (Replace if necessary.) Supply grease [4)] (9000H cycle). See *chapter 9.4.1*		●	●
11	LU-axes speed reducers			●		Injection Syringe	Check for malfunction. (Replace if necessary.) Supply grease[4)] (9000H cycle). See *chapter 9.3.3* and *chapter 9.4.4* .		●	●

Table 9-1: GP8, GP7 Inspection Items (Sheet 2 of 2)

Items[1)]		Schedule				Method	Operation	Inspection Charge		
		Daily	1000HCycle	9000HCycle	18000H			Specified Personnel	Licensee	Your YASKAWA representative
12	R-axis speed reducer			●		Injection Syringe	Check for malfunction. (Replace if necessary.) Supply grease[4)] (9000H cycle). See *chapter 9.4.5*		●	●
13	BT-axes speed reducers T-axis gear			●		Injection Syringe	Check for malfunction. (Replace if necessary.) Supply grease[4)] (9000H cycle). See *chapter 9.4.6*		●	●
14	Overhaul				●					●

1 Inspection No. correspond to the numbers in *fig. 9-1(a) "GP8: Inspection Items"* , *table 9-1(b) "GP7: Inspection Items"*
2 Due to the operating conditions or the ambient environment, the oil may seep from the lip part of the oil seal and adhere to the outside of the lip part.
The seeped oil may accumulate and fall in drops depending on the operation. Before the operation, clean the oil in the lower side of the oil seal of sliding parts to prevent the seeped oil from accumulating. Frequent reverse motions or operations under a high-temperature environment may lead to a high temperature of the motor and the oil may seep due to a rise in the internal pressure of the grease bath.
In that case, release the grease inlet immediately after completing the operation to lower the internal pressure.
(When releasing the grease inlet, ensure that grease does not scatter.)
3 Wire harness in manipulator to be replaced at 18000H inspection.
4 For the grease, refer to *table 9-2 "Inspection Parts and Grease Used (GP8, GP7)"* .

Table 9-2: Inspection Parts and Grease Used (GP8, GP7)

No.	Grease Used	Inspected Parts
10,11,12,13	Lubriplate SYNXTREME FG-0	S, L, U, R, B and T-axes speed reducers, T- and S-axes gears

The numbers in the above table correspond to the numbers in *table 9-1 "GP8, GP7 Inspection Items"* .

9.4 Notes on Grease Replenishment Procedures

Make sure to follow the instructions listed below at grease replenishment. Failure to observe the following notes may result in damage to motor and speed reducer.

NOTE

- A injection syringe is one of recommended spare parts for grease replenishment. Do not replenish grease by using the grease pump.
- Soften the grease in a injection syringe by stirring or etc., and fill the necessary amount.
- If the replenishment is performed more than the specified numbers, the internal pressure may rise during the operation and the grease leakage may occur.
- When filling, grease may flow from the inlet.
  Make sure to prepare a cloth or etc. to wipe off grease and the container which receives grease.

9.4 Notes on Grease Replenishment Procedures

9.4.1 Grease Replenishment for S-Axis Speed Reducer

Fig. 9-5: S-Axis Speed Reducer Diagram (GP8, GP7)

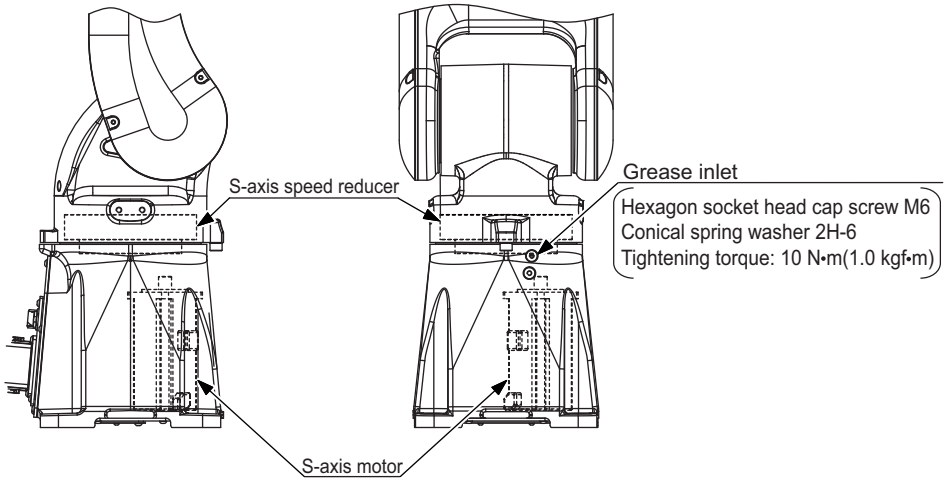

9.4.1.1 Grease Replenishment

(Refer to *fig. 9-5 "S-Axis Speed Reducer Diagram (GP8, GP7)"* .)

Replenish the grease in accordance with the following procedure:

1. Adjust the posture of the manipulator to perform grease replenishment smoothly.
2. Remove the hexagon socket head cap screw M6 from the grease inlet.
3. Install the injection syringe for replenishment to the grease inlet. (The injection syringe is a recommended spare part.)
4. Inject the grease into the grease inlet.
   - Grease type: SYNXTREME FG-0
   - Amount of grease: 3 g
5. Remove the injection syringe for replenishment from the grease inlet. Install the hexagon socket head cap screw M6 to the grease inlet. When installing the screw, wrap a seal tape around the threading part of the screw.

9.4.2 Grease Replenishment for S-Axis Gear

Fig. 9-6: S-Axis Gear Diagram

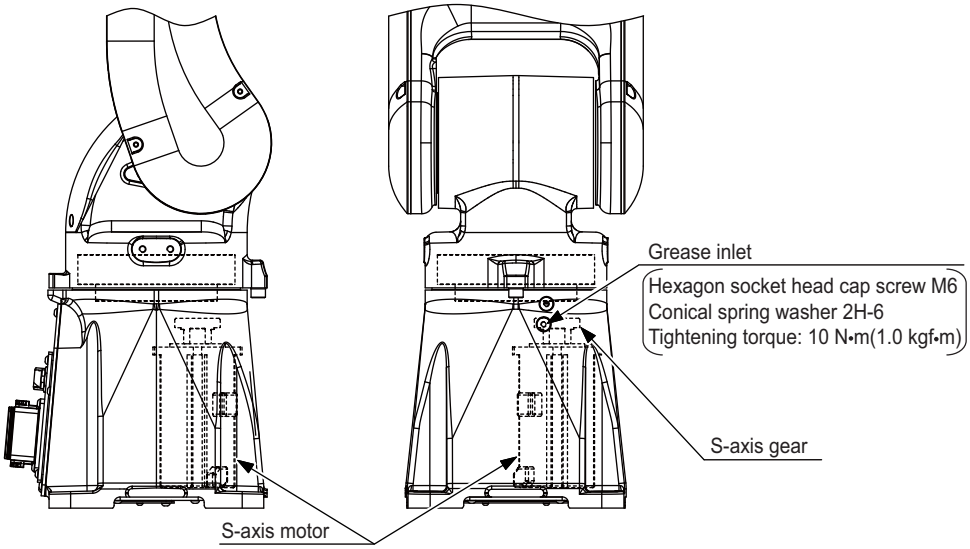

9.4.2.1 Grease Replenishment

(Refer to *fig. 9-6 "S-Axis Gear Diagram"* .)

Replenish the grease in accordance with the following procedure:

1. Adjust the posture of the manipulator to perform grease replenishment smoothly.
2. Remove the hexagon socket head cap screw M6 from the grease inlet.
3. Install the injection syringe for replenishment to the grease inlet. (The injection syringe is a recommended spare part.)
4. Inject the grease into the grease inlet.
   - Grease type: SYNXTREME FG-0
   - Amount of grease: 3 g
5. Remove the injection syringe for replenishment from the grease inlet. Install the hexagon socket head cap screw M6 to the grease inlet. When installing the screw, wrap a seal tape around the threading part of the screw.

9.4.3.1 Grease Replenishment (GP8, GP7)

(Refer to *fig. 9-7(a) "L-Axis Speed Reducer Diagram (GP8)"*, *fig. 9-7(b) "L-Axis Speed Reducer Diagram (GP7)"*)

1. Adjust the posture of the manipulator to perform grease replenishment smoothly.
2. Take off the cover to remove the hexagon socket head cap screw M6 from the grease inlet.
3. Install the injection syringe for replenishment to the grease inlet. (The injection syringe is a recommended spare part.)
4. Inject grease into the grease inlet.
   - Grease type: SYNXTREME FG-0
   - Amount of grease: 3 g
5. Remove the injection syringe for replenishment from the grease inlet. Install the hexagon socket head cap screw M6 to the grease inlet. When installing the screw, wrap a seal tape around the threading part of the screw.

9.4.4 Grease Replenishment for U-Axis Speed Reducer

Fig. 9-8: U-Axis Speed Reducer Diagram (GP8, GP7)

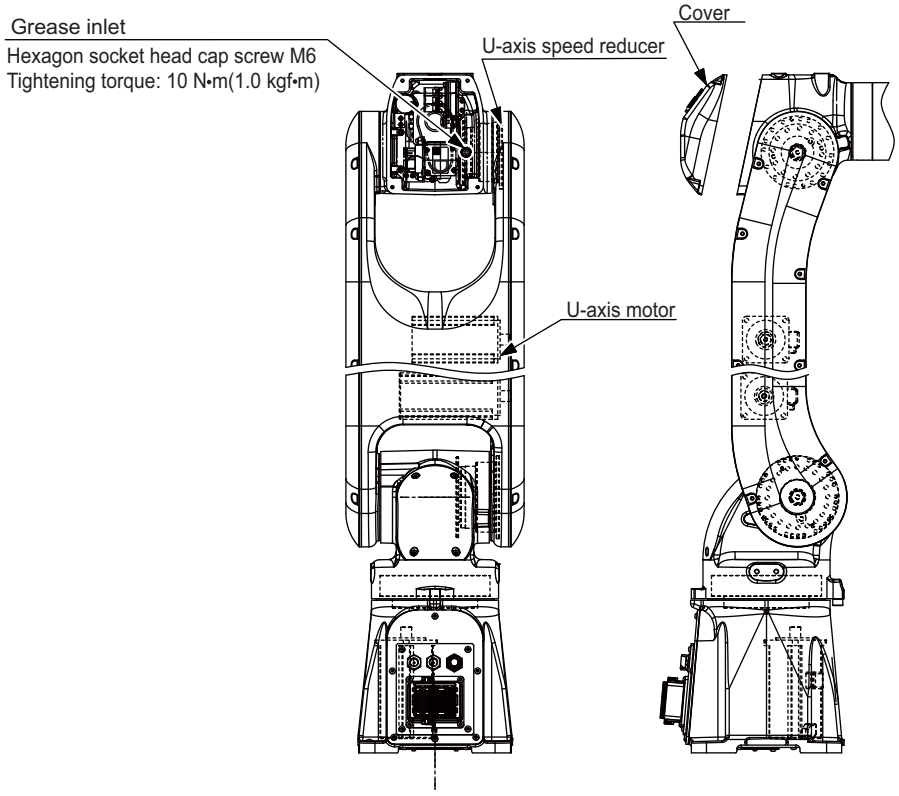

9.4.4.1 Grease Replenishment

(Refer to "*fig. 9-8 “U-Axis Speed Reducer Diagram (GP8, GP7)”* .)

1. Adjust the posture of the manipulator to perform grease replenishment smoothly.
2. Take off the cover to remove the hexagon socket head cap screw M6 from the grease inlet
3. Install the injection syringe for replenishment to the grease inlet. (The injection syringe is a recommended spare part.)
4. Inject grease into the grease inlet.
   - Grease type: SYNXTREME FG-0
   - Amount of grease: 1.5 g
5. Remove the injection syringe for replenishment from the grease inlet. Install the hexagon socket head cap screw M6 to the grease inlet. When installing the screw, wrap a seal tape around the threading part of the screw.

9.4.5 Grease Replenishment for R-Axis Speed Reducer

Fig. 9-9: R-Axis Speed Reducer Diagram

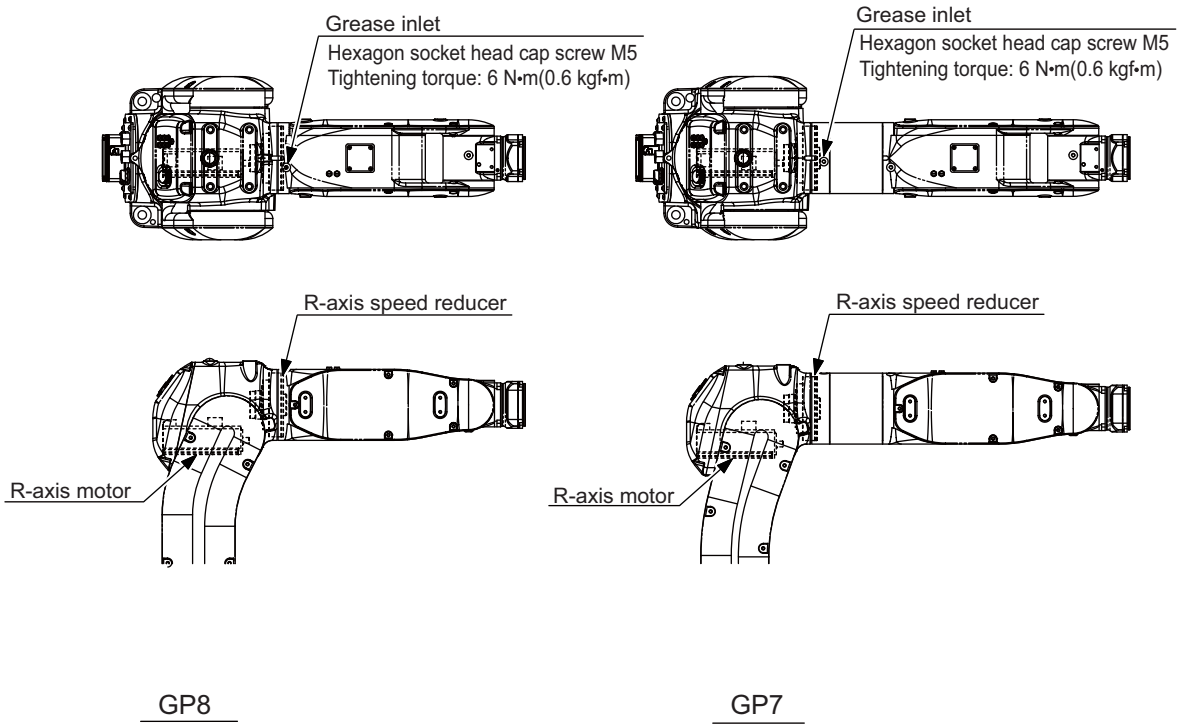

9.4.5.1 Grease Replenishment

(Refer to *fig. 9-9 "R-Axis Speed Reducer Diagram"* .)

1. Adjust the posture of the manipulator to perform grease replenishment smoothly.
2. Remove the hexagon socket head cap screw M5 from the grease inlet
3. Inject grease into the grease inlet.
   - Grease type: SYNXTREME FG-0
   - Amount of grease: 1 g
4. Install the hexagon socket head cap screw M6 to the grease inlet. When installing the screw, wrap a seal tape around the threading part of the screw.

9.4.6 Grease Replenishment for B- and T-Axes Speed Reducers

Fig. 9-10: B- and T-Axes Speed Reducers Diagram (GP8, GP7)

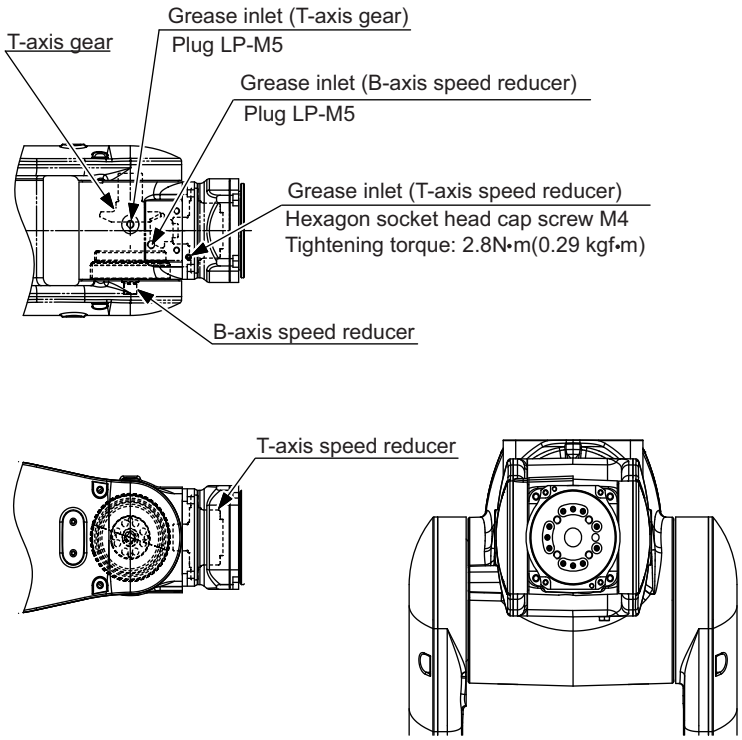

9.4.6.1 Grease Replenishment for B-Axis

(Refer to *fig. 9-10 "B- and T-Axes Speed Reducers Diagram (GP8, GP7)"* .)

1. Adjust the posture of the manipulator to perform grease replenishment smoothly.
2. Remove the plug LP-M5 from the grease inlet
3. Install the injection syringe for replenishment to the grease inlet.
   (The injection syringe is a recommended spare part.)
4. Inject grease into the grease inlet.
   – Grease type: SYNXTREME FG-0
   – Amount of grease: 1 g
5. Install the plug LP-M5 to the grease inlet.
   When installing the plug, wrap a seal tape around the threading part of the plug.

9.4.6.2 Grease Replenishment for T-Axis

(Refer to *fig. 9-10 “B- and T-Axes Speed Reducers Diagram (GP8, GP7)”* .)

1. Adjust the posture of the manipulator to perform grease replenishment smoothly.
2. Remove the hexagon socket head cap screw M4 and the plug LP-M5 from the grease inlet.
3. Install the injection syringe for replenishment to the grease inlet.
   (The injection syringe is a recommended spare part.)
4. Inject grease into the grease inlet.
   – Grease type: SYNXTREME FG-0
   – Amount of grease: 1 g
5. Remove the injection syringe for replenishment from the grease inlet.
   Install the screw and the plug to the grease inlet.
   When installing, wrap a seal tape around the threading parts of the screw and the plug.

10 Recommended Spare Parts

It is recommended to keep the parts and components in the following table in stock as spare parts for YR-1-06VX8-F00/YR-1-06VX7-F00.

To purchase lead wires of the wire harness or etc., check the order/ manufacture no. and contact YASKAWA representative.

Product performance cannot be guaranteed when using spare parts from any company other than YASKAWA. The spare parts are ranked as follows:

- Rank A: Expendable and frequently replaced parts
- Rank B: Parts for which replacement may be necessary as a result of frequent operation
- Rank C: Drive unit

NOTE For replacing parts in rank B or rank C, contact your YASKAWA representative.

Table 10-1: Spare Parts for the YR-1-06VX8-F00 (Sheet 1 of 3)

Rank	Parts No.	Name	Inquiry Code	Manufacturer	Qty.	Qty. per Unit	Remarks
A	1	Grease	SYNXTREME FG-0	Lubriplate Lubricants Co.	1	16 kg	
A	2	Adhesive	LT518	Henkel Japan Ltd	1	-	
A	3	Sealing Bond	TB1206C	Three Bond Co., Ltd.	1	-	
A	4	Seal Tape	TB4501	Three Bond Co., Ltd.	1	-	
A	5	Battery Pack	HW1483880-A	YASKAWA Electric Corporation	1	3	
A	6	Lead Wire for Battery Replacement	HW1471281-A	YASKAWA Electric Corporation	1	1	
A	7	Gasket for S Head Cover	HW1406930-1	YASKAWA Electric Corporation	1	1	
A	8	Gasket for L-Arm Cover	HW1305693-1	YASKAWA Electric Corporation	1	2	
A	9	Gasket for Casing Cover	HW1406931-1	YASKAWA Electric Corporation	1	1	
A	10	Gasket for U-Arm Cover	HW1305695-1	YASKAWA Electric Corporation	1	2	

Table 10-1: Spare Parts for the YR-1-06VX8-F00 (Sheet 2 of 3)

Rank	Parts No.	Name	Inquiry Code	Manufacturer	Qty.	Qty. per Unit	Remarks
B	11	Grease Kit for Replenishment	HW1484274-A	YASKAWA Electric Corporation	1	1	
B	12	L-Axis Timing Belt	100S5M380	Mitsuboshi Belting Ltd.	1	1	
B	13	U-Axis Timing Belt	100S5M415	Mitsuboshi Belting Ltd.	1	1	
B	14	R-Axis Timing Belt	BG222UP3M6-HC	Tsubakimoto Chain Co.	1	1	
B	15	B-Axis Timing Belt	BG525UP3M4-HY	Tsubakimoto Chain Co.	1	1	
B	16	T-Axis Timing Belt	BG354UP3M4-HY	Tsubakimoto Chain Co.	1	1	
B	17	Replacement Kit for S-Axis Speed Reducer[1)]	HW1484240-C	YASKAWA Electric Corporation	1	1	Speed reducer: HW1384531-B Gear: HW1306288-1/ HW1306289-1
B	18	Replacement Kit for L-Axis Speed Reducer[1)]	HW1484242-C	YASKAWA Electric Corporation	1	1	Speed reducer: HW1384227-A
B	19	Replacement Kit for U-Axis Speed Reducer[1)]	HW1484243-C	YASKAWA Electric Corporation	1	1	Speed reducer: HW1384226-A
B	20	Replacement Kit for R-Axis Speed Reducer[1)]	HW1484244-B	YASKAWA Electric Corporation	1	1	Speed reducer: HW0388708-B
B	21	Replacement Kit for B-Axis Speed Reducer[1)]	HW1484245-B	YASKAWA Electric Corporation	1	1	Speed reducer: HW1384236-A
B	22	Replacement Kit for T-Axis Speed Reducer[1)]	HW1484246-A	YASKAWA Electric Corporation	1	1	Speed reducer: HW1384235-A
B	23	Wrist Unit	HW1172783-B	YASKAWA Electric Corporation	1	1	
B	24	Wire Harness in Manipulator	HW1173731-A	YASKAWA Electric Corporation	1	1	
B	25	Wire Harness in Manipulator for B-, T-Axes	HW1173729-A	YASKAWA Electric Corporation	1	1	
B	26	Bypass Cable	HW1471212-A	YASKAWA Electric Corporation	1	1	
C	27	S-and L-Axes AC Servomotor	SGM7J-04APK-YR1*	YASKAWA Electric Corporation	1	2	
C	28	U-Axis AC Servomotor	SGM7J-02APK-YR1*	YASKAWA Electric Corporation	1	1	

Table 10-1: Spare Parts for the YR-1-06VX8-F00 (Sheet 3 of 3)

Rank	Parts No.	Name	Inquiry Code	Manufacturer	Qty.	Qty. per Unit	Remarks
C	29	R-Axis AC Servomotor	SGM7J-01APK-YR1*	YASKAWA Electric Corporation	1	1	
C	30	B- and T-Axes AC Servomotor	SGM7A-01APK-YR1*	YASKAWA Electric Corporation	1	2	
C	31	Power Cable for S-Axis AC Servomotor	HW1372681-B	YASKAWA Electric Corporation	1	1	
C	32	Power Cable for L- and U-Axes AC Servomotor	HW1372681-A	YASKAWA Electric Corporation	1	2	
C	33	Power Cable for R-Axis AC Servomotor	HW1372679-A	YASKAWA Electric Corporation	1	1	
C	34	Multi-port connector	HW1384619-A	YASKAWA Electric Corporation	1	3	
C	35	Power Supply Board	HW1384624-A JARCR-APU01-A	YASKAWA Electric Corporation	1	1	

1 The replacement kit for the speed reducer includes the following parts.
•Speed reducer and gear (described in Remarks)
•Required parts to change speed reducer (oil seals, bolts, or other parts)
For details of the replacement kit for the speed reducer, contact your YASKAWA representative.

Table 10-2: Spare Parts for the YR-1-06VX7-F00 (Sheet 1 of 2)

Rank	Parts No.	Name	Inquiry Code	Manufacturer	Qty.	Qty. per Unit	Remarks
A	1	Grease	SYNXTREME FG-0	Lubriplate Lubricants Co.	1	16 kg	
A	2	Adhesive	LT518	Henkel Japan Ltd	1	-	
A	3	Sealing Bond	TB1206C	Three Bond Co., Ltd.	1	-	
A	4	Seal Tape	TB4501	Three Bond Co., Ltd.	1	-	
A	5	Battery Pack	HW1483880-A	YASKAWA Electric Corporation	1	3	
A	6	Lead Wire for Battery Replacement	HW1471281-A	YASKAWA Electric Corporation	1	1	
A	7	Gasket for S Head Cover	HW1406930-1	YASKAWA Electric Corporation	1	1	
A	8	Gasket for L-Arm Cover	HW1305693-1	YASKAWA Electric Corporation	1	2	
A	9	Gasket for Casing Cover	HW1406931-1	YASKAWA Electric Corporation	1	1	
A	10	Gasket for U-Arm Cover	HW1305695-1	YASKAWA Electric Corporation	1	2	
B	11	Grease Kit for Replenishment	HW1484274-A	YASKAWA Electric Corporation	1	1	
B	12	L-Axis Timing Belt	100S5M380	Mitsuboshi Belting Ltd.	1	1	
B	13	U-Axis Timing Belt	100S5M590	Mitsuboshi Belting Ltd.	1	1	
B	14	R-Axis Timing Belt	BG222UP3M6-HC	Tsubakimoto Chain Co.	1	1	
B	15	B-Axis Timing Belt	BG525UP3M4-HY	Tsubakimoto Chain Co.	1	1	
B	16	T-Axis Timing Belt	BG354UP3M4-HY	Tsubakimoto Chain Co.	1	1	
B	17	Replacement Kit for S-Axis Speed Reducer[1)]	HW1484240-D	YASKAWA Electric Corporation	1	1	Speed reducer: HW1384531-B Gear: HW1306524-1/ HW1306525-1
B	18	Replacement Kit for L-Axis Speed Reducer[1)]	HW1484242-D	YASKAWA Electric Corporation	1	1	Speed reducer: HW1384227-B
B	19	Replacement Kit for U-Axis Speed Reducer[1)]	HW1484243-D	YASKAWA Electric Corporation	1	1	Speed reducer: HW1384226-B

Table 10-2: Spare Parts for the YR-1-06VX7-F00 (Sheet 2 of 2)

Rank	Parts No.	Name	Inquiry Code	Manufacturer	Qty.	Qty. per Unit	Remarks
B	20	Replacement Kit for R-Axis Speed Reducer[1)]	HW1484244-B	YASKAWA Electric Corporation	1	1	Speed reducer: HW0388708-B
B	21	Replacement Kit for B-Axis Speed Reducer[1)]	HW1484245-B	YASKAWA Electric Corporation	1	1	Speed reducer: HW1384236-A
B	22	Replacement Kit for T-Axis Speed Reducer[1)]	HW1484246-A	YASKAWA Electric Corporation	1	1	Speed reducer: HW1384235-A
B	23	Wrist Unit	HW1172783-B	YASKAWA Electric Corporation	1	1	
B	24	Wire Harness in Manipulator	HW1173731-B	YASKAWA Electric Corporation	1	1	
B	25	Wire Harness in Manipulator for B-, T-Axes	HW1173729-B	YASKAWA Electric Corporation	1	1	
B	26	Bypass Cable	HW1471212-A	YASKAWA Electric Corporation	1	1	
C	27	S-and L-Axes AC Servomotor	SGM7J-04APK-YR1*	YASKAWA Electric Corporation	1	2	
C	28	U-Axis AC Servomotor	SGM7J-02APK-YR1*	YASKAWA Electric Corporation	1	1	
C	29	R-Axis AC Servomotor	SGM7J-01APK-YR1*	YASKAWA Electric Corporation	1	1	
C	30	B- and T-Axes AC Servomotor	SGM7A-01APK-YR1*	YASKAWA Electric Corporation	1	2	
C	31	Power Cable for S-Axis AC Servomotor	HW1372681-B	YASKAWA Electric Corporation	1	1	
C	32	Power Cable for L- and U-Axes AC Servomotor	HW1372681-A	YASKAWA Electric Corporation	1	2	
C	33	Power Cable for R-Axis AC Servomotor	HW1372679-A	YASKAWA Electric Corporation	1	1	
C	34	Multi-port connector	HW1384619-A	YASKAWA Electric Corporation	1	3	
C	35	Power Supply Board	HW1384624-A JARCR-APU01-A	YASKAWA Electric Corporation	1	1	

1 The replacement kit for the speed reducer includes the following parts.
•Speed reducer and gear (described in Remarks)
•Required parts to change speed reducer (oil seals, bolts, or other parts)
For details of the replacement kit for the speed reducer, contact your YASKAWA representative.

MOTOMAN-GP8, -GP7
SUPPLEMENTAL INSTRUCTIONS

Ⓒ2017 YASKAWA ELECTRIC CORPORATION
Published by YASKAWA

YASKAWA

YASKAWA ELECTRIC CORPORATION

December 2020 17-04

MANUAL NO.
HW1484385 ② 21/21